# PRODUCT SHEET

**Description:**
Wardrobe Hook "Croc", Zamak, Inlay, Retractable, Chrome Pl. Incl. 2x M4 x10mm & 2 x M4 x16mm Screws

**Item number:**
22.07.520-0

| Units | Box | Carton | HS Code | Barcode |
|---|---|---|---|---|
| Pcs. | 25 | 125 | 8302500000 | 5704866513692 |

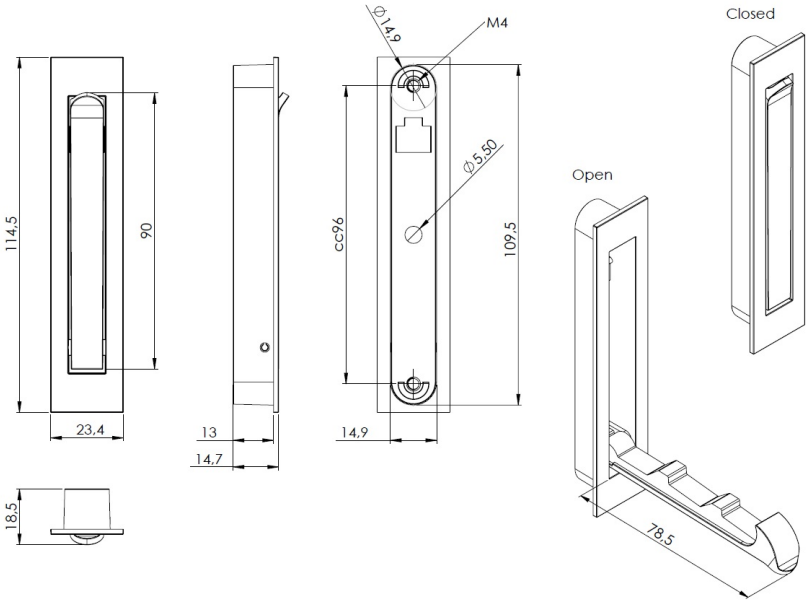


**SISO A/S**
Mileparken 11
DK-2740 Skovlunde
Denmark
VAT: DK 24786013

Phone +45 45 830 900

www.siso.dk
siso@siso.dk

Danske Bank
Nytorv Branch
Copenhagen
SWIFT: DABADKKK

Account no.
4180 3112 112936
IBAN Account
DK7230003112112936